NOTES: UNLESS OTHERWISE SPECIFIED

1. DIMENSIONS ARE IN INCHES (mm).

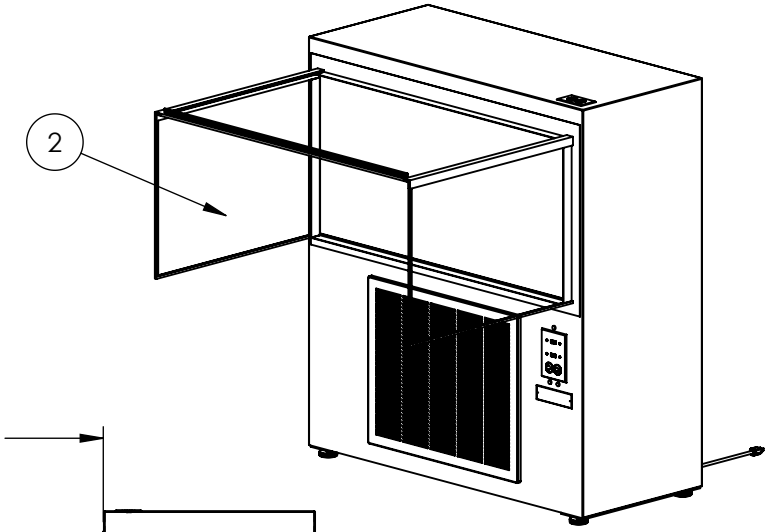


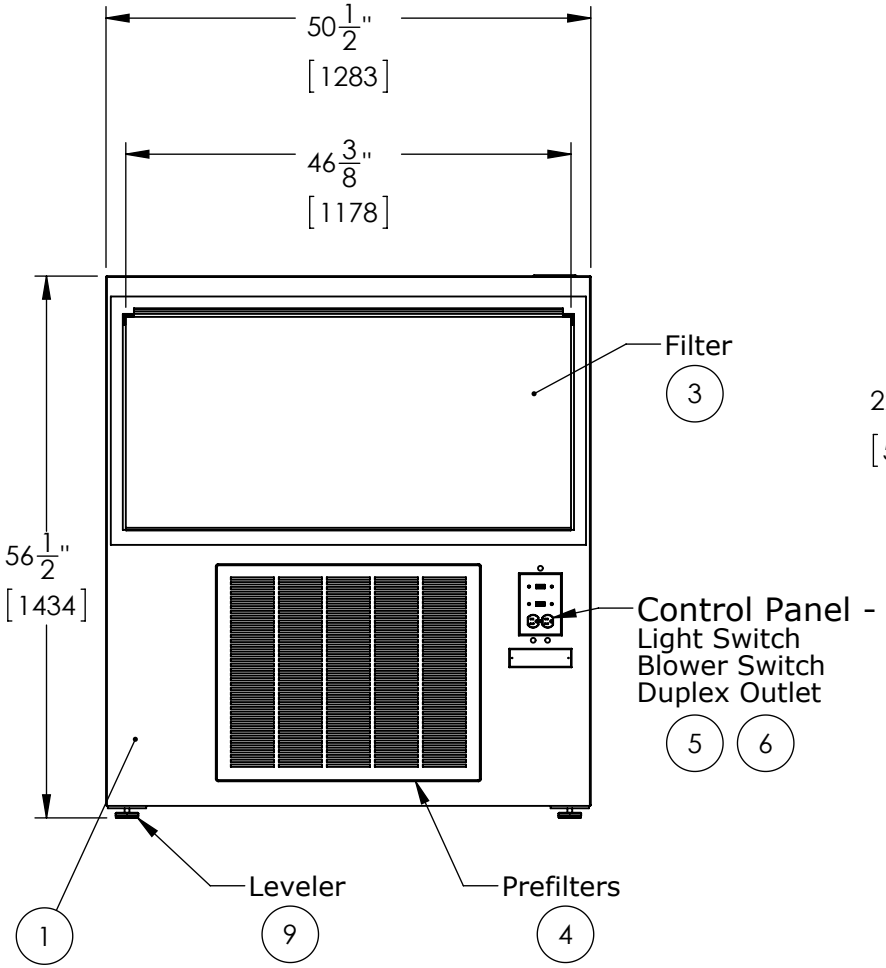


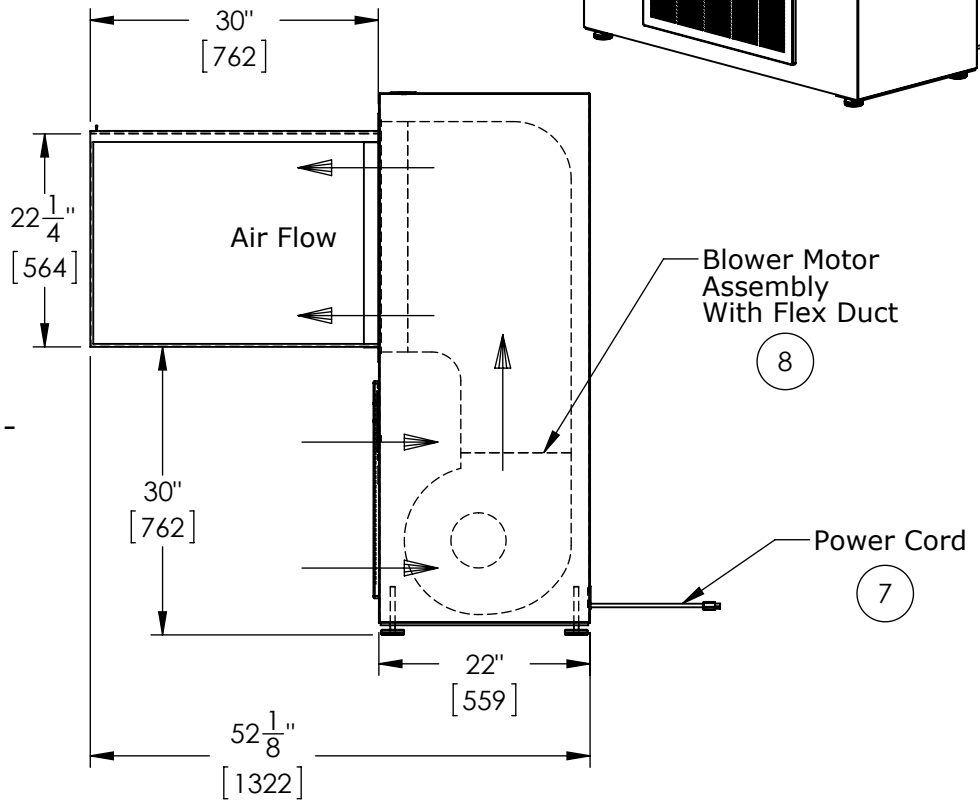


© COPYRIGHT 2010
CLEAN AIR PRODUCTS

**Clean AiR PRODUCTS**
8605 WYOMING AVENUE NORTH • MINNEAPOLIS, MN 55445
800-423-9728 • ph: 763-425-9122 • fax:763-425-2004
www.cleanairproducts.com

DESCRIPTION. Horizontal Flow Clean Bench
CAP303-424-30H-30D

QUOTE NO.

| DO NOT SCALE | DATE DRAWN | QUOTE FORM | REV | SHEET |
|---|---|---|---|---|
| | 12/14/2012 | 038267 | 1 | 1 of 2 |

**OPTIONS:**

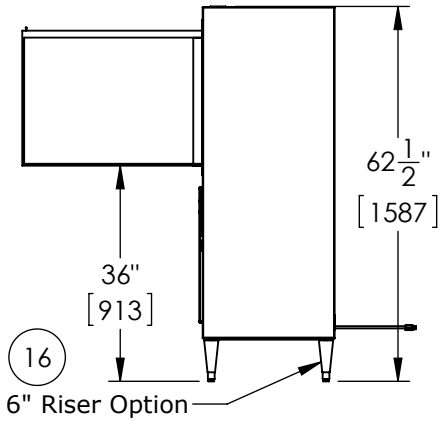


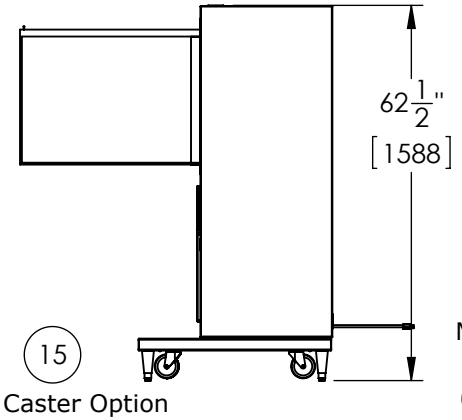


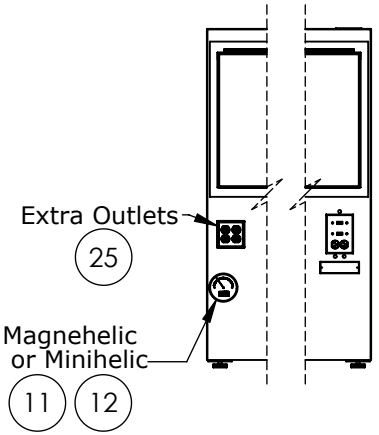


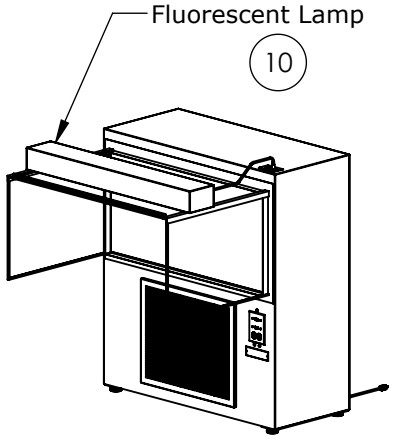


**Standard Features:**

1. **Heavy Gauge White Vinyl Clad Steel Construction**
2. **Clear Polycarbonate Hood Panels: 30" from Floor +/- 1/2" With Leg Adjustment**
3. **Front Removable HEPA- 99.99% on 0.3 Micron Filter (Expanded Steel, Epoxy Painted, Screen On Final Filter Face)**
4. **Fiberglass Pre-filter Behind Hinged Louvered Grill**
5. **Electrical Service: Convenience Receptacle (4 Amps Available), 120V, 1-Phase, 3 Wire, With Power Cord, 9.09 A FLA**
6. **Blower & Light Switch**
7. **Power Cord (5-15P)**
8. **Blower Motor Assembly With Flex Duct**
9. **Adjustable Leg Leveling Glides**

**Options:**

10. **Fluorescent Light - T8 Lamps**
11. **Magnehelic Gage**
12. **Minihelic Gage**
13. **Stainless Steel Work Surface**
14. **Stainless Steel Cabinet**
15. **Casters, With Equipment Legs - Increase Work Surface Height 6"**
16. **6" Equipment Legs**
17. **Conductive Plastic Laminate Table Top**
18. **Ion Bar System**
19. **Grill on HEPA (Removable)**
20. **Anti-Static PVC Hood Panels**
21. **Safety Glass Hood Panels**
22. **Safety Glass Top & Stainless Hood Panels**
23. **Deeper Hood Area (36",42",48")**
24. **ULPA - 99.999% on 0.12 Micron Filter**
25. **Extra Service Receptacle-Separate 15A Power Cord**

NOTES: UNLESS OTHERWISE SPECIFIED

1. DIMENSIONS ARE IN INCHES (mm).

© COPYRIGHT 2010 CLEAN AIR PRODUCTS

**Clean AiR PRODUCTS**
8605 WYOMING AVENUE NORTH • MINNEAPOLIS, MN 55445
800-423-9728 • ph: 763-425-9122 • fax:763-425-2004
www.cleanairproducts.com

DESCRIPTION. Horizontal Flow Clean Bench
CAP303-424-30H-30D

QUOTE NO.

| DO NOT SCALE | DATE DRAWN | QUOTE FORM | REV | SHEET |
|---|---|---|---|---|
| | 12/14/2012 | 038267 | 1 | 2 of 2 |